LONG SEAMS	
COURSE	ORIENTATION
1(TOP)	45°
2	225°

*VERT – TOP TO BOTTOM

Ship loose items:

(1 PC) Swing gates (A71-24 (GALV.))
(1 PCs.) Caged Ladders w/ Hardware
(2 PCs.) Handrails w/ Hardware

Fall arrest system:

(1) Top & Bottom Bracket (PART# 6116631)
(1) Cable guide (PART# 6100400)
(1) 25' Cable (PART# 6104025)

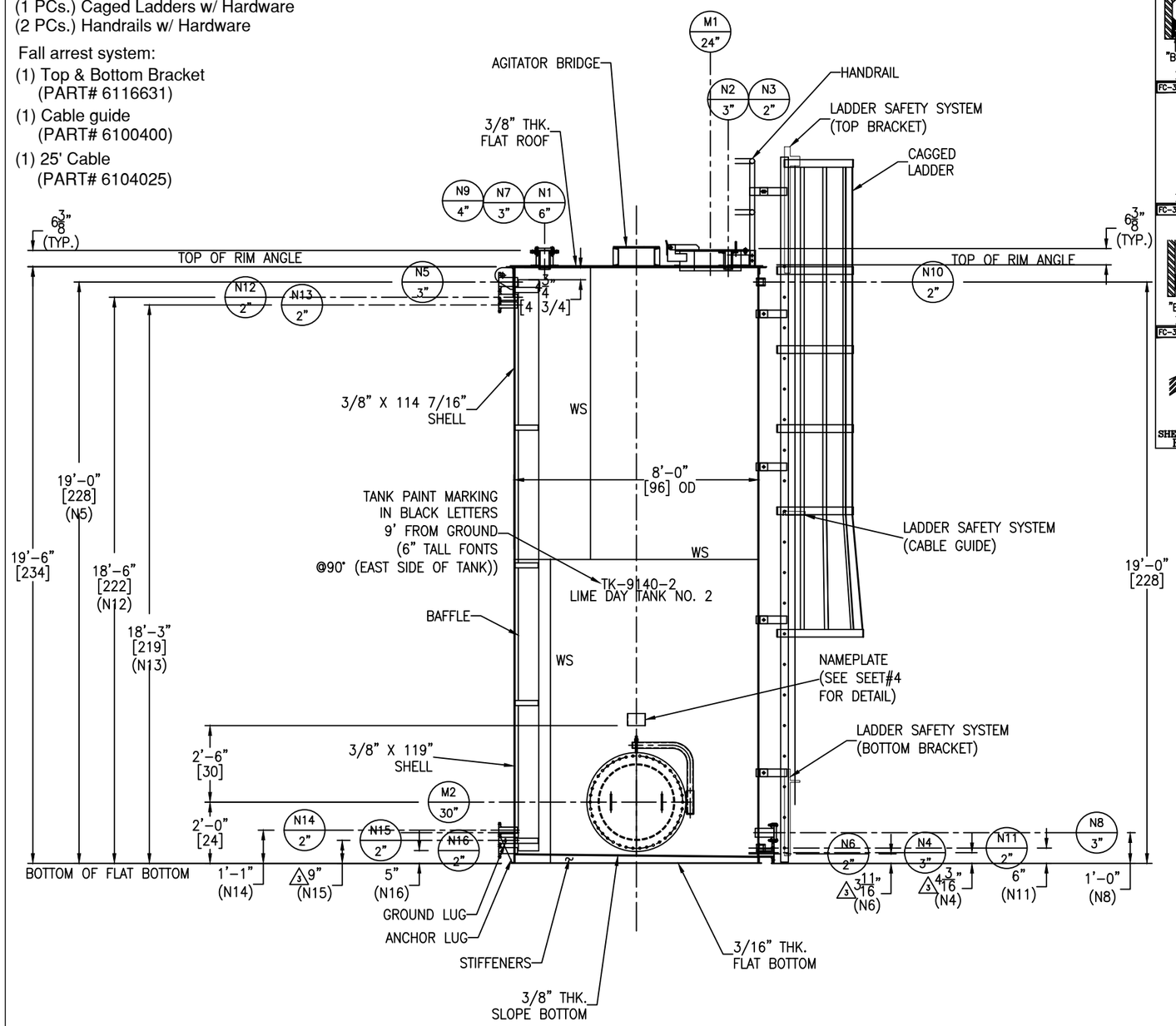

FC-38 GT-90

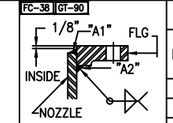

FIGURE NO. 1

FC-38 GT-90

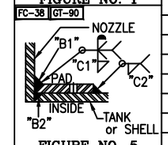

FIGURE NO. 5

FC-38 GT-90

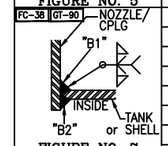

FIGURE NO. 7

FC-38 GT-90

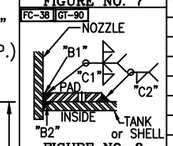

FIGURE NO. 8

FC-38 SA-37

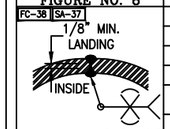

SHELL THK. 5/16"-3/4"
FIGURE NO. 10

NOZZLE SCHEDULE

MARK	SERVICE	SIZE	RATING	TYPE / STYLE	NECK SCHED.	PROJECTION EXT. (℄)	PROJECTION INT. (MIN.)	WELD FIGURE	REPAD SIZE (WIDTH X THK.)	WELD SIZE "A1"	"A2"	"B1"	"B2"	"C1"	"C2"
N1	VENT LINE	6"	150#	FFSO	40S	SEE DWG	–	1,5	2" X 3/16"	1/4	1/4	1/4	1/8	3/16	3/16
N2	LIME FILL LINE	3"	150#	FFSO	40S	SEE DWG	1"	1,8	2" X 3/16"	5/16	5/16	1/4	1/8	3/16	3/16
N3	WATER FILL LINE	2"	150#	FFSO	80S	SEE DWG	1"	1,8	2" X 3/16"	3/16	3/16	1/4	1/8	3/16	3/16
N4	DRAIN LINE	3"	150#	FFSO	80S	6"	–	1,5	2" X 3/16" DOGHOUSE SEE DWG	5/16	5/16	1/4	1/8	3/16	3/16
N5	OVERFLOW LINE	3"	150#	FFSO	80S	6"	1"	1,7	–	5/16	5/16	1/4	1/4	–	–
N6	PUMP SUCTION	2"	150#	FFSO	80S	3 6"	–	1,5	2" X 3/16" DOGHOUSE SEE DWG	3/16	3/16	1/4	1/4	3/16	3/16
N7	SPARE	3"	150#	FFSO W/ BLIND	80S	SEE DWG	1"	1,8	2" X 3/16"	5/16	5/16	1/4	1/8	3/16	3/16
N8	SPARE	3"	150#	FFSO W/ BLIND	80S	6"	1"	1,7	–	5/16	5/16	1/4	1/4	–	–
N9	INSTRUMENT CONN.	4"	150#	FFSO	40S	SEE DWG	1"	1,8	2" X 3/16"	1/4	1/4	1/4	1/8	3/16	3/16
N10	LEVEL SIGHT GLASS CONN. (TOP)	2"	3000#	FULL THRD CPLG	–	–	1/2"	7	–	–	–	1/4	1/8	–	–
N11	LEVEL SIGHT GLASS CONN. (BTM)	2"	3000#	FULL THRD CPLG	–	–	1/2"	7	–	–	–	1/4	1/8	–	–
M1	ROOF MANWAY	24"	–	API W/ HINGE	1/4"	SEE DWG	1"	8	2" X 3/16"	1/4	1/4	1/4	1/8	3/16	3/16
M2	SHELL MANWAY	30"	–	API W/ DAVIT	3/8"	6"	1"	7	–	5/16	5/16	1/4	1/4	–	–
N12	INSTRUMENT CONN.(LSHH)	2"	150#	FFSO	80S	6"	1"	1,7	–	3/16	3/16	1/4	1/8	–	–
N13	INSTRUMENT CONN.(LSH)	2"	150#	FFSO	80S	6"	1"	1,7	–	3/16	3/16	1/4	1/8	–	–
N14	INSTRUMENT CONN.(LSL)	2"	150#	FFSO	80S	6"	1"	1,7	–	3/16	3/16	1/4	1/8	–	–
N15	INSTRUMENT CONN.(LSLL)	2"	150#	FFSO	80S	6"	1"	1,7	–	3/16	3/16	1/4	1/8	–	–
N16	INSTRUMENT CONN.(LIT)	2"	150#	FFSO	80S	6"	1"	1,7	–	3/16	3/16	1/4	1/8	–	–

MATERIALS OF CONSTRUCTION

	VESSEL
SHELL	SA36
FLAT TOP/BOTTOM	SA36
RIM ANGLE	SA36
NOZZLE NECKS	SA53B-ERW
NOZZLE FLANGES	SA105
MANWAY NECKS	SA36
MANWAY FLANGES	SA36
GASKETS	GARLOCK 3000
BOLTS/STUDS	SA193-B7 (ZINC PLATED)
NUTS	SA194-2H (ZINC PLATED)
REPADS	SA36
COUPLINGS	SA105
SUPPORTS/HOLD DOWNS	SA36
LIFTING LUGS	SA36
AGITATOR BRIDGE	SA36/A992
MOUNTING PLATE	SA36
GROUND LUG	SA36
BAFFLE/BAFFLE SUPPORT	SA36
LADDER	SA36
TANK CLIPS (LADDER)	SA36
HANDRAIL	SA500
HANDRAIL CLIPS	SA36
STIFFENERS	SA36
PLATFORM CLIPS	–
DIPTUBE SUPPORT	–
JACKET SHELL	–
JACKET HEADS	–
JACKET NOZZLE NECKS	–

DESIGN DATA

	VESSEL
DESIGN AND FAB. CODE	API650
CERT. STAMP REQ'D.	NO
DESIGN PRESSURE	ATM
DESIGN TEMPERATURE	120° F
MIN. DESIGN METAL TEMP.	30° F @ ATM
OPERATING PRESSURE	ATM
OPERATING TEMPERATURE	100° F
JOINT EFFICIENCY HEADS	0.70
JOINT EFFICIENCY SHELL	0.70
CORROSION ALLOWANCE	0"
SPECIFIC GRAVITY	1.09
EARTHQUAKE ZONE	Ss = (0.26) S1 = (0.095)
WIND LOAD	105 MPH
STRESS RELIEF	NOT REQ'D
RADIOGRAPHIC EXAM	NOT REQ'D
DYE PENETRANT EXAM	NOT REQ'D
MAGNETIC PARTICLE EXAM	NOT REQ'D
HYDROSTATIC TEST	–
PNEUMATIC TEST	2 PSIG / GAUGE #1
JKT DESIGN AND FAB. CODE	–
JKT CERT. STAMP REQ'D.	–
JKT DESIGN PRESSURE	–
JKT DESIGN TEMPERATURE	–
JKT MIN. DESIGN METAL TEMP.	–
JKT OPERATING PRESSURE	–
JKT OPERATING TEMPERATURE	–
JKT JOINT EFFICIENCY HEADS	–
JKT JOINT EFFICIENCY SHELL	–

VESSEL FINISH

INTERIOR WELD TREATMENT:	SAV TANK STANDARD
EXTERIOR WELD TREATMENT:	SAV TANK STANDARD
SAV TANK FINISHING STANDARD:	N/A
INSULATION:	N/A
PAINTING/GALVANIZING:	SEE NOTE 6

VESSEL CAPACITY AND WEIGHTS

OPERATING CAPACITY	6,600 GAL.
FULL CAPACITY	7,100 GAL.
EMPTY SHIPPING WEIGHT (NO LADDER, HANDRAIL, AGITATOR)	12,000 LBS.
WEIGHT FULL OF WATER	71,200 LBS.
WEIGHT FULL OF PRODUCT	76,600 LBS.
WEIGHT OF LADDER AND HANDRAILS	900 LBS.
WEIGHT OF AGITATOR BRIDGE & AGITATOR	3 1,100 LBS.

QUALITY CONTROL

ENG. _____ DATE: _____

Q.C. _____ DATE: _____

This drawing is issued for customer approval. please review, make approval changes (if any) in red. check the appropriate box, sign & date.

- ☐ Approval – no changes. Please proceed with fabrication.
- ☐ Approved as noted. Please proceed with fabrication
- ☐ Not approved. Please make changes and resubmit.

Customer signature _____ Date _____

GENERAL NOTES

1.) COVER ALL FLANGES, OPENINGS & MACHINED SURFACES PRIOR TO SHIPMENT UNLESS OTHERWISE NOTED.
2.) BOLT HOLES TO STRADDLE 0° & 180° UNLESS OTHERWISE NOTED.
3.) NOZZLE REPADS TO HAVE (1) ø1/4" NPT TELL-TALE HOLES ON HORIZONTAL CENTER LINE. ALL OTHER REPADS TO HAVE (1) ø1/4" WEEP HOLE AT LOWEST POINT ON PAD.
4.) MANUFACTURING TOLERANCE TO BE IN ACCORDANCE WITH API STANDARD 650 7.5.
5.) ASME MATERIALS TO CONFORM TO THE FOLLOWING: FLANGES – B16.5, FITTINGS – B16.9 & COUPLINGS – B16.11.
6.) PAINTING VESSEL EXTERIOR – SANDBLAST SP6. (2) COAT TNEMEC n69 (6 MILS DFT) & (1) COAT TNEMEC n73 (2.5 MILS DFT) WHITE 3 GALVANIZING: UPPER LADDER, LOWER LADDER, ROOF HANDRAILS, REST PLATFORM, REST PLATFORM HANDRAILS & GRATING TO BE HOT DIPPED GALVANIZED.

REVISIONS

REV	D.BY	C.BY	DATE	DESCRIPTION
				AS BUILT
3	RS	–	4/30/25	CERTIFIED
2	RS	AD	3/18/25	APPROVAL REV 2
1	RS	NP	2/10/25	APPROVAL REV 1
0	RS	NP	12/19/24	APPROVAL

Savannah Tank & Equipment Corp.
1517 Telfair Road, Savannah, GA 31415
(912) 233-8902

DRAWN BY: RS
CHK'D BY: NP
APPROVED BY: NP
SCALE: 3/8" = 1'-0"

RIVER TO TAP
LIME DAY TANK(TANK#2)
EQUIP. # TK-9140-2
CUST. PO # G0080008.46

DRAWING NO.: 064-24-1 SHT 1 OF 9 REV. SET 3

LONG SEAMS

COURSE	ORIENTATION
1(TOP)	45°
2	225°

*VERT – TOP TO BOTTOM

Ship loose items:

(1 PC) Swing gates (A71-24 (GALV.))
(1 PCs.) Caged Ladders w/ Hardware
(2 PCs.) Handrails w/ Hardware

Fall arrest system:

(1) Top & Bottom Bracket
(PART# 6116631)

(1) Cable guide
(PART# 6100400)

(1) 25' Cable
(PART# 6104025)

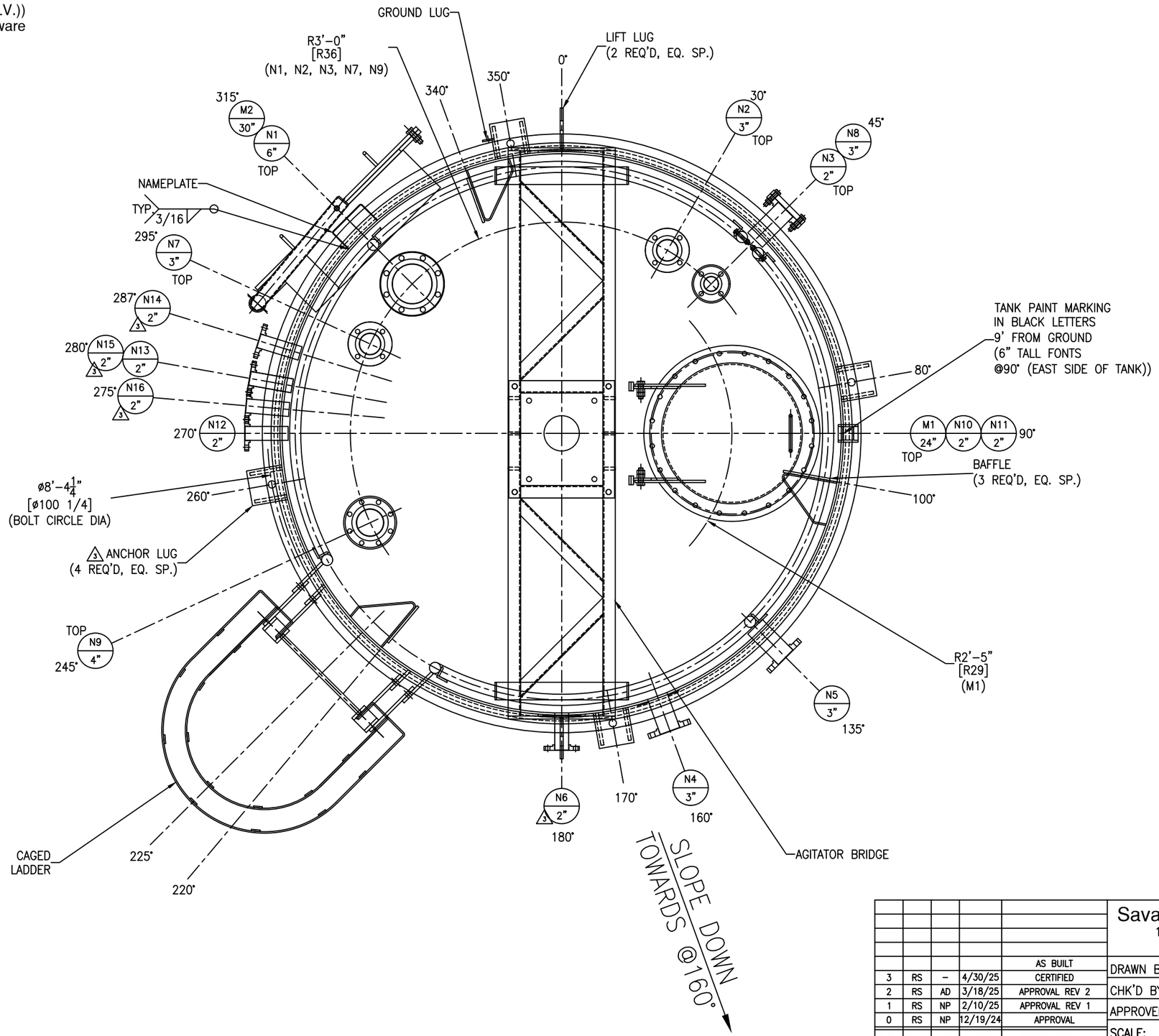

REV	D.BY	C.BY	DATE	DESCRIPTION
				AS BUILT
3	RS	–	4/30/25	CERTIFIED
2	RS	AD	3/18/25	APPROVAL REV 2
1	RS	NP	2/10/25	APPROVAL REV 1
0	RS	NP	12/19/24	APPROVAL

1 REVISIONS

Savannah Tank & Equipment Corp.
1517 Telfair Road, Savannah, GA 31415
(912) 233-8902

DRAWN BY: RS
CHK'D BY: NP
APPROVED BY: NP
SCALE: 1" = 1'-0"

RIVER TO TAP
LIME DAY TANK(TANK#2)
EQUIP. # TK-9140-2
CUST. PO # G0080008.46

DRAWING NO.: 064-24-2 SHT 2 OF 9 REV. SET 3

FC-38

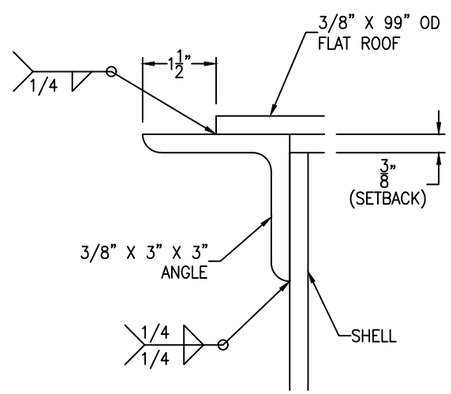

RIM ANGLE DETAIL

SCALE: 6" = 1'-0"

FC-38

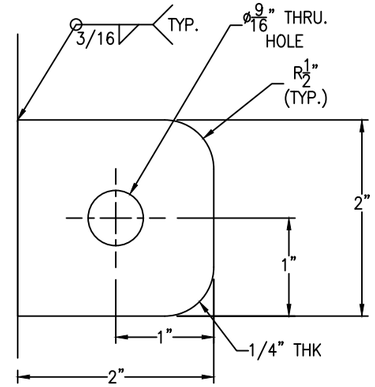

G.L IS LOCATED @350°. 3

GROUND LUG DETAIL

(1 REQ'D) SCALE: 1'-0" = 1'-0"

FC-38

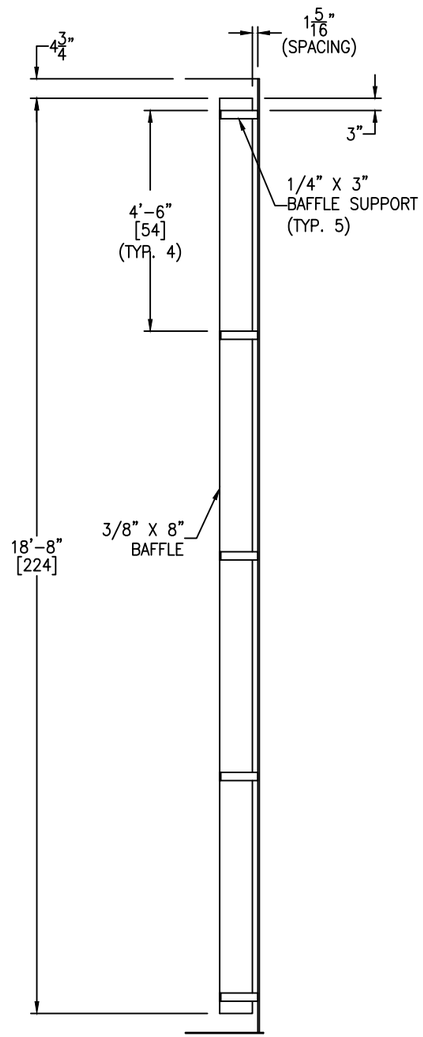

BAFFLE DETAIL

(3 REQ'D) SCALE: 1/2" = 1'-0"

FC-38

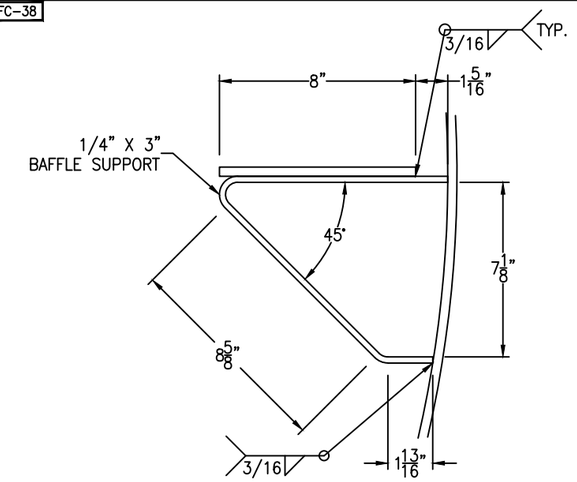

BAFFLE SUPPORT DETAIL

(15 REQ'D) SCALE: 3" = 1'-0"

FC-38

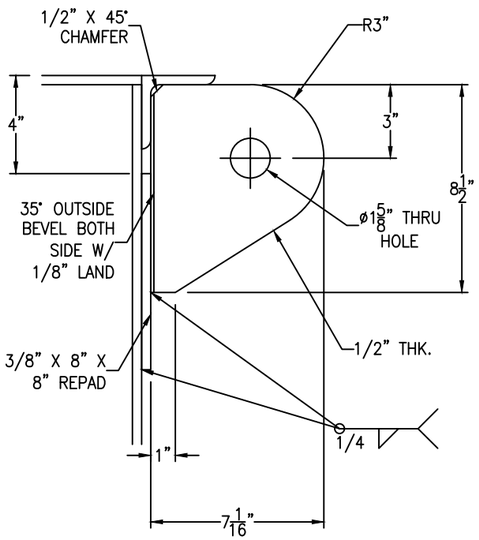

LIFT LUG DETAIL

(2 REQ'D) SCALE: 3" = 1'-0"

FC-38

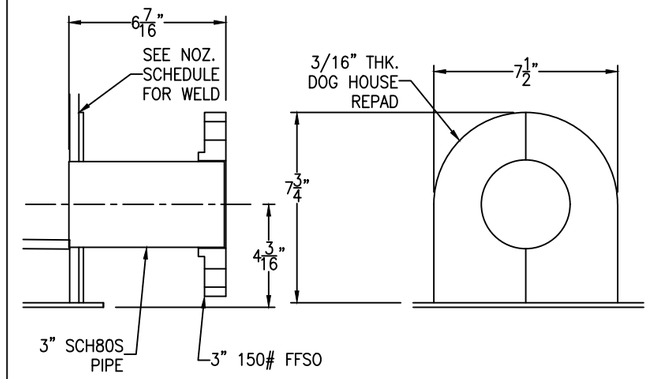

3 NOZZLE N4 DETAIL

SCALE: 3" = 1'-0"

FC-38

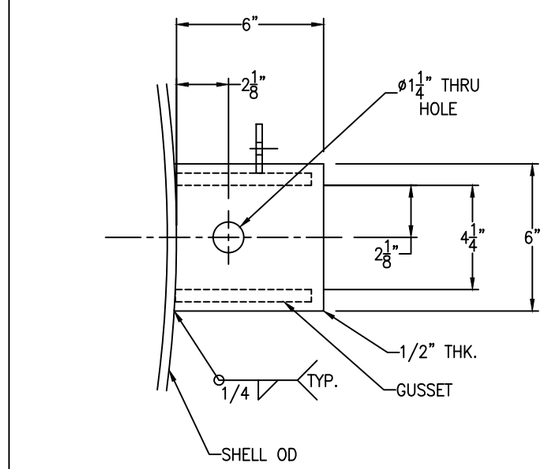

ANCHOR LUG DETAIL

(4 REQ'D) SCALE: 3" = 1'-0"

FC-38

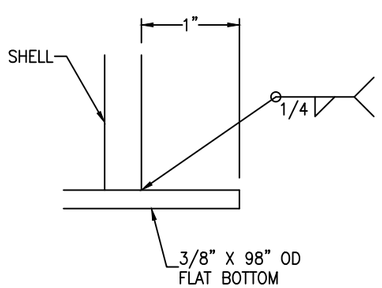

FLAT BOTTOM DETAIL

SCALE: 1'-0" = 1'-0"

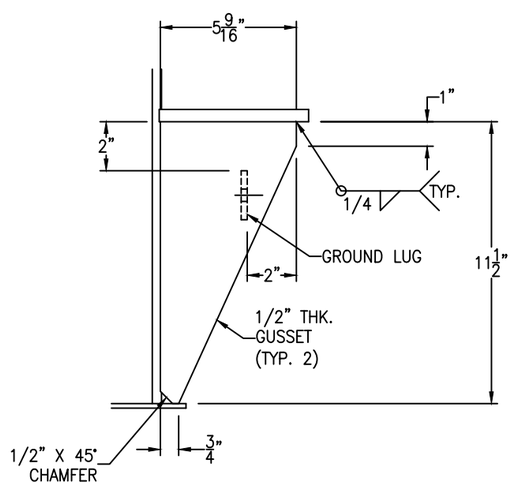

FC-38

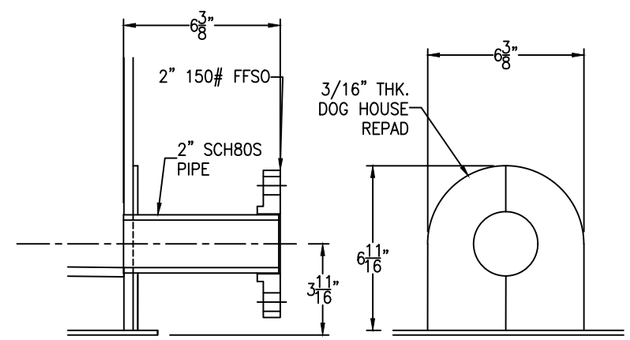

3 NOZZLE N6 DETAIL

SCALE: 3" = 1'-0"

Bolting for blinds
N7, N8: (4+4) 5/8"-11 NC x 3" HH BOLT
(4+4) 5/8"-11 NC HH NUT
(1+1) FULL FACE GASKET, 1/8" THK. X
7 1/2" OD X 3 1/2" ID W/ (4) 3/4" DIA
HOLES ON 6" BOLT CIRCLE.

REV	D.BY	C.BY	DATE	DESCRIPTION
				AS BUILT
3	RS	–	4/30/25	CERTIFIED
2	RS	AD	3/18/25	APPROVAL REV 2
1	RS	NP	2/10/25	APPROVAL REV 1
0	RS	NP	12/19/24	APPROVAL

1 REVISIONS

Savannah Tank & Equipment Corp.
1517 Telfair Road, Savannah, GA 31415
(912) 233-8902

DRAWN BY: RS
CHK'D BY: NP
APPROVED BY: NP
SCALE: 3/8" = 1'-0"

RIVER TO TAP
LIME DAY TANK(TANK#2)
EQUIP. # TK-9140-2
CUST. PO # G0080008.46

DRAWING NO.: 064-24-3 SHT 3 OF 9 REV. SET 3

FC-38

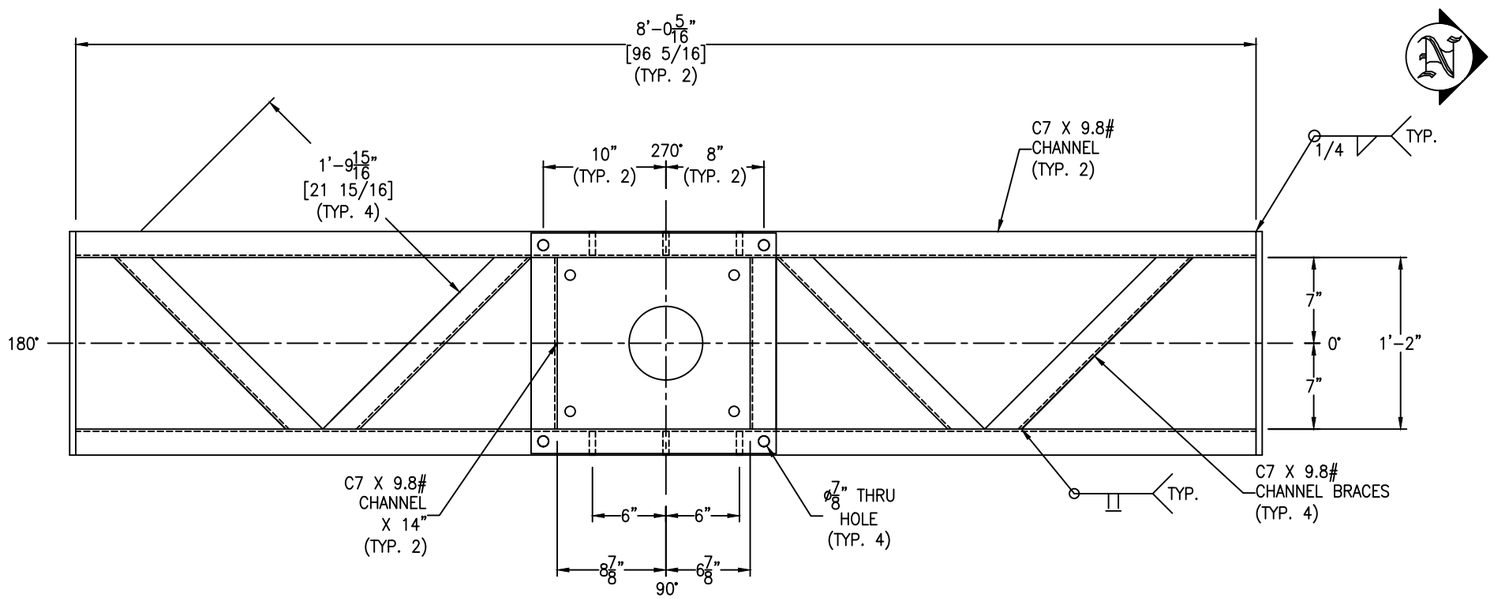

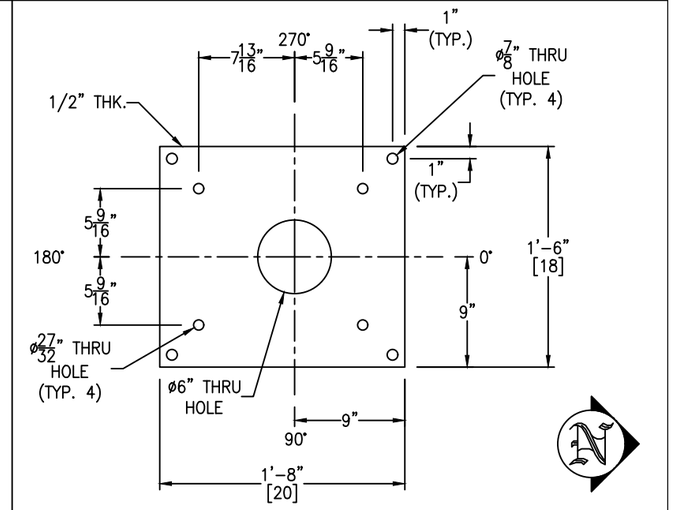

MOUNTING PLATE DETAIL

SCALE: 1 1/2" = 1'-0"

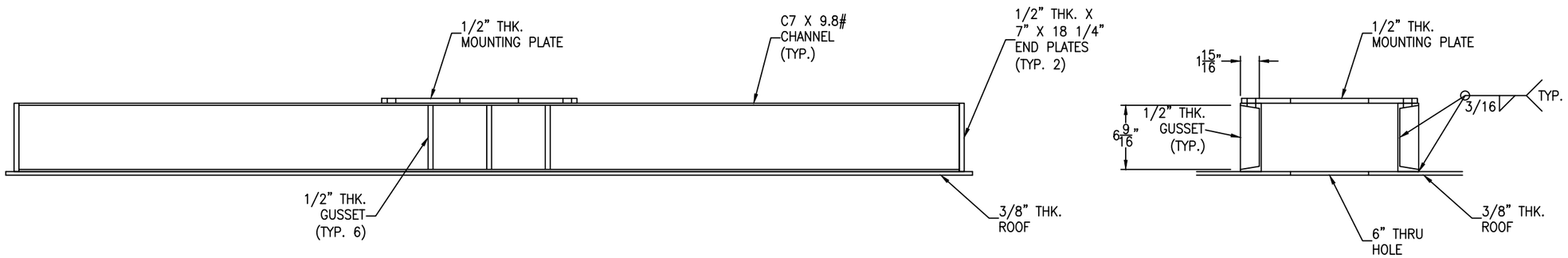

AGITATOR BRIDGE DETAIL

SCALE: 1 1/2" = 1'-0"

***** NOTE: CONCENTRATED LOAD ON THE BRIDGE NOT TO EXCEED 3000 LBF.*****

Bolting for mountng plate:
(4) 3/4"-10 NC x 2" HH BOLT
(4) 3/4"-10 NC HH NUT

REV	D.BY	C.BY	DATE	DESCRIPTION
				AS BUILT
3	RS	–	4/30/25	CERTIFIED
2	RS	AD	3/18/25	APPROVAL REV 2
1	RS	NP	2/10/25	APPROVAL REV 1
0	RS	NP	12/19/24	APPROVAL

⚠ REVISIONS

Savannah Tank & Equipment Corp.
1517 Telfair Road, Savannah, GA 31415
(912) 233-8902

DRAWN BY: RS
CHK'D BY: NP
APPROVED BY: NP
SCALE: 3/8" = 1'-0"

RIVER TO TAP
LIME DAY TANK(TANK#2)
EQUIP. # TK-9140-2
CUST. PO # G0080008.46

DRAWING NO.: 064-24-4 SHT 4 OF 9 REV. SET 3

FC-38

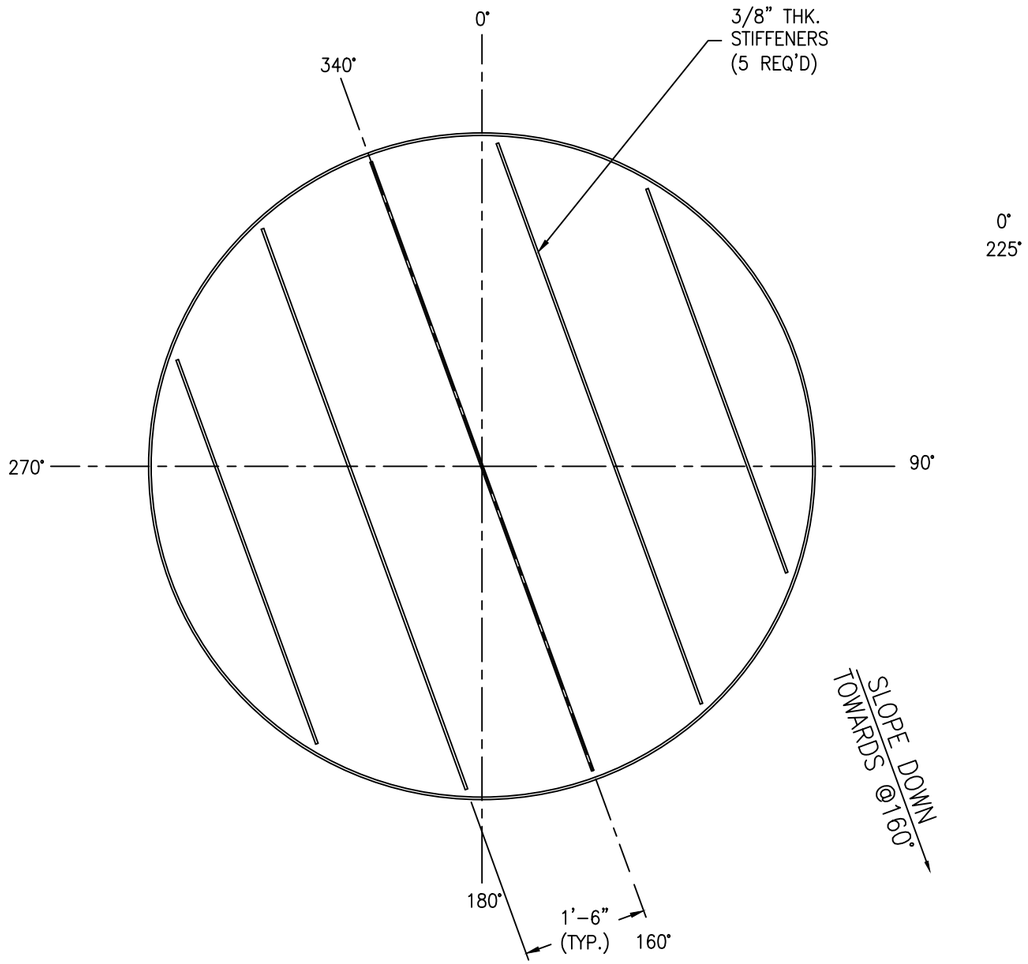

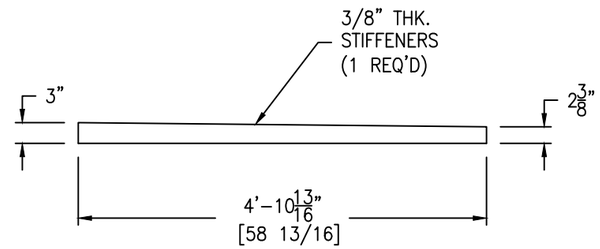

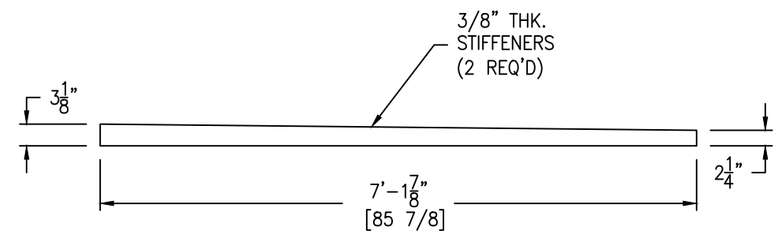

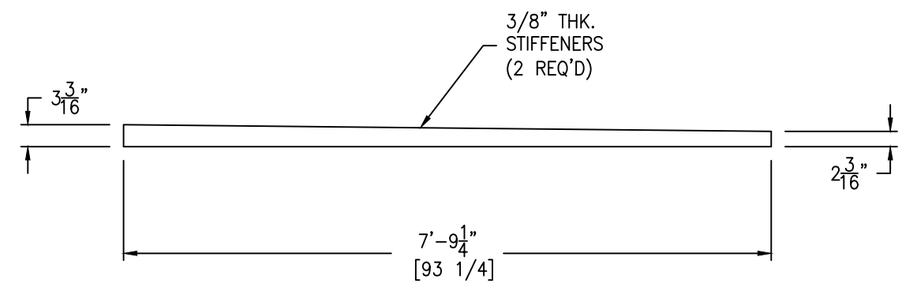

STIFFENER DETAIL

SCALE: 3/4" = 1'-0"

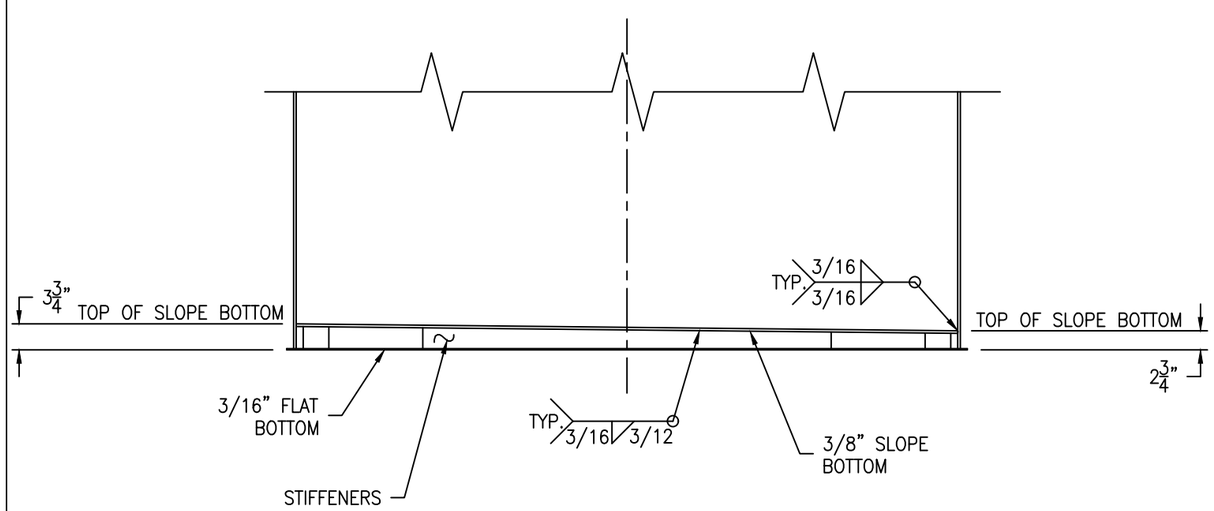

SLOPE BOTTOM DETAIL

SCALE: 3/4" = 1'-0"

REV	D.BY	C.BY	DATE	DESCRIPTION
				AS BUILT
3	RS	–	4/30/25	CERTIFIED
2	RS	AD	3/18/25	APPROVAL REV 2
1	–	–	–	APPROVAL REV 1
0	–	–	–	APPROVAL

⚠1 REVISIONS

Savannah Tank & Equipment Corp.
1517 Telfair Road, Savannah, GA 31415
(912) 233-8902

DRAWN BY: RS
CHK'D BY: NP
APPROVED BY: NP
SCALE: 3/8" = 1'-0"

RIVER TO TAP
LIME DAY TANK(TANK#2)
EQUIP. # TK-9140-2
CUST. PO # G0080008.46

DRAWING NO.: 064-24-5 SHT 5 OF 9 REV. SET 3

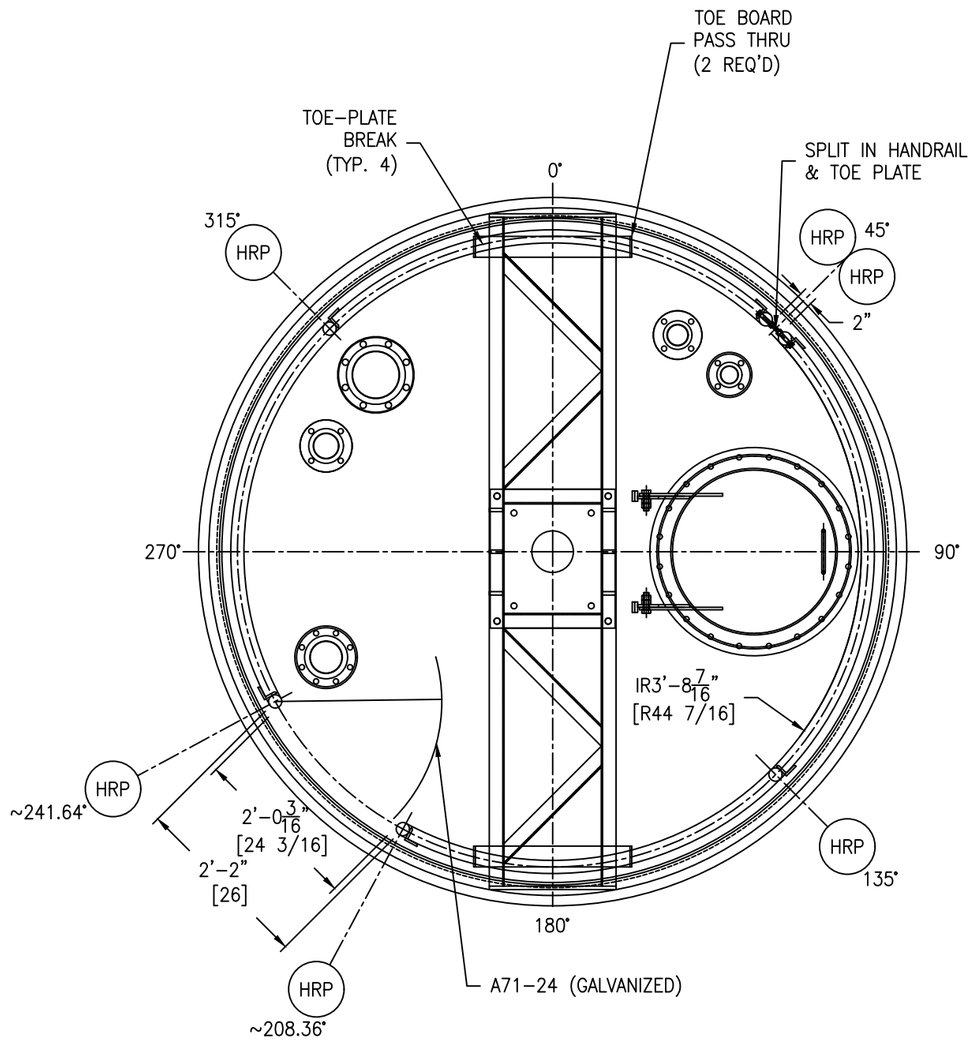

SCALE: 3/4" = 1'–0"

HANDRAIL BOLTING:
(12) 1/2–13 NC X 3" HH BOLT – SA193–B7 (ZINC PLATED)
(12) 1/2–13 NC HH NUT – SA194–2H (ZINC PLATED)

GM–73

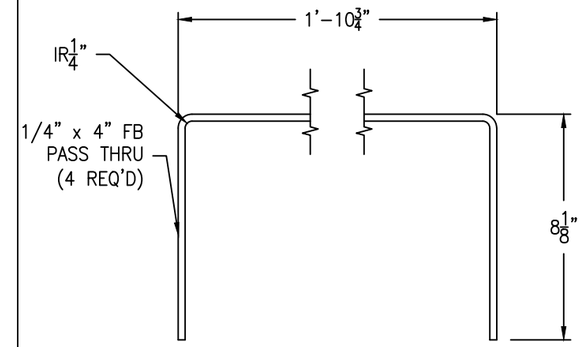

GM–73

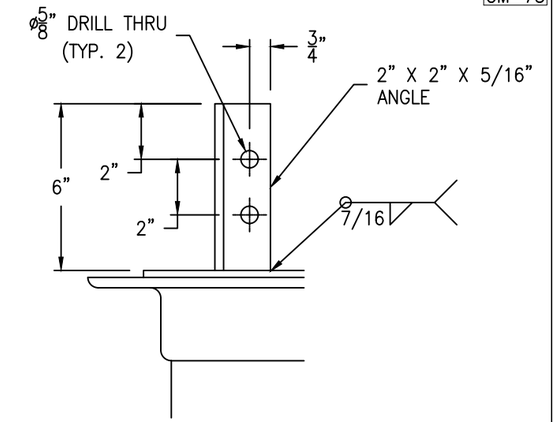

⚠3 POST CLIP DETAIL

(6 REQ'D) SCALE: 3" = 1'–0"

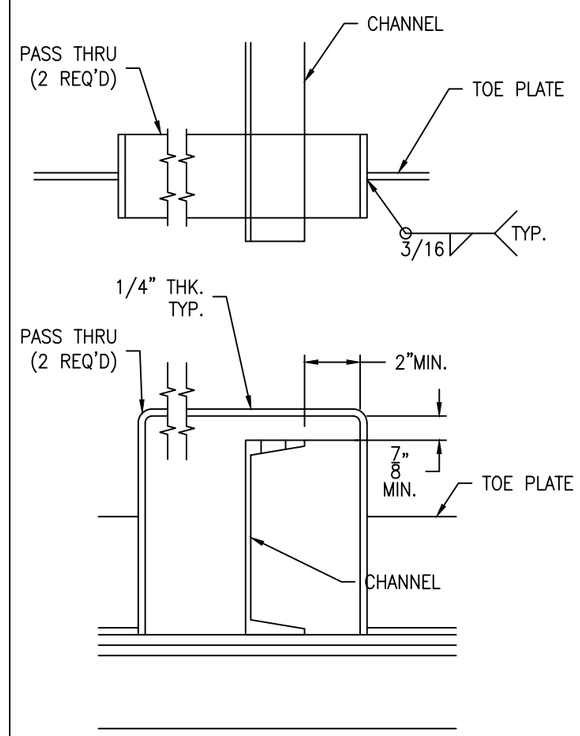

TOE PLATE BREAK DETAIL

(2 REQ'D) SCALE: 3" = 1'–0"

GM–73

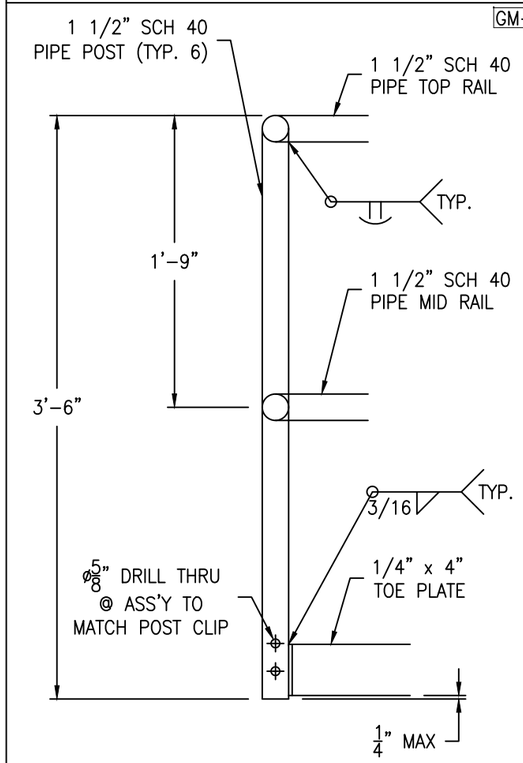

HANDRAIL DETAIL

SCALE: 1 1/2" = 1'–0"

HANDRAIL TO BE HOT-DIPPED GALVANIZED

REV	D.BY	C.BY	DATE	DESCRIPTION
				AS BUILT
3	RS	–	4/30/25	CERTIFIED
2	RS	AD	3/18/25	APPROVAL REV 2
1	RS	NP	2/10/25	APPROVAL REV 1
0	RS	NP	12/19/24	APPROVAL

⚠1 REVISIONS

Savannah Tank & Equipment Corp.
1517 Telfair Road, Savannah, GA 31415
(912) 233–8902

DRAWN BY: RS
CHK'D BY: NP
APPROVED BY: NP
SCALE: 3/8" = 1'–0"

RIVER TO TAP
LIME DAY TANK(TANK#2)
EQUIP. # TK–9140–2
CUST. PO # G0080008.46

DRAWING NO.: 064–24–5 SHT 6 OF 9 REV. SET 3

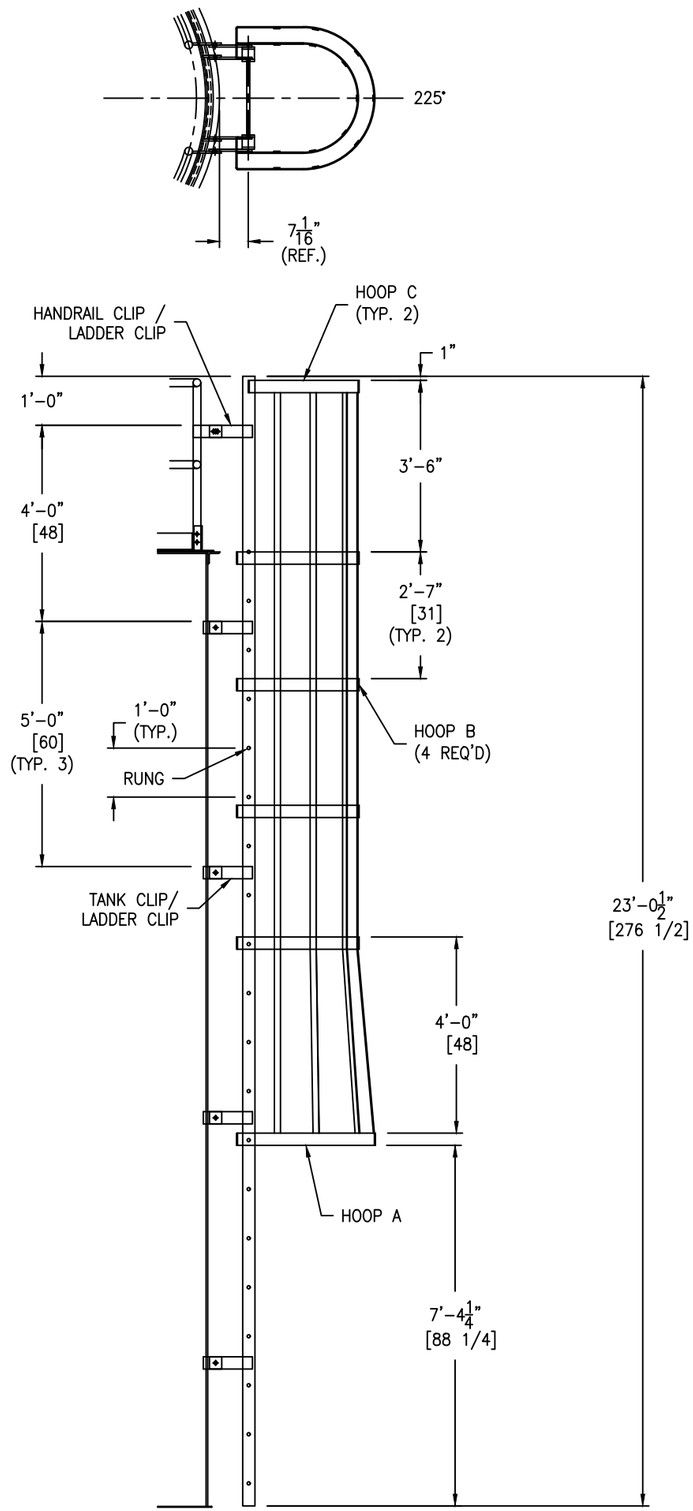

UPPER LADDER DETAIL

SCALE: 1/2" = 1'-0"

GM-73

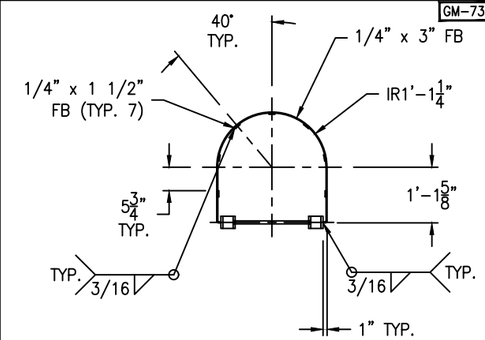

HOOP "C" DETAIL

(2 REQ'D) SCALE: 1/2" = 1'-0"

GM-73

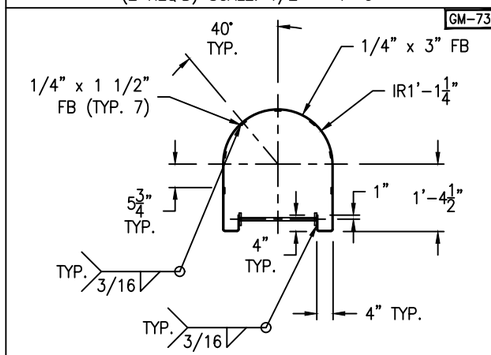

HOOP "B" DETAIL

(4 REQ'D) SCALE: 1/2" = 1'-0"

GM-73

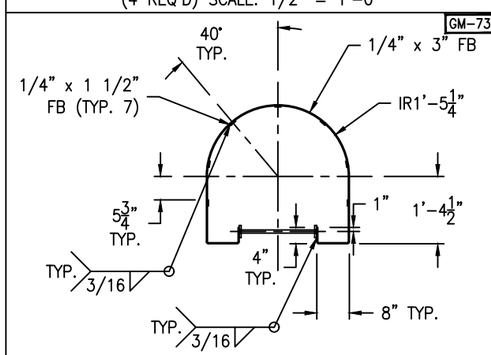

HOOP "A" DETAIL

(1 REQ'D) SCALE: 1/2" = 1'-0"

GM-73

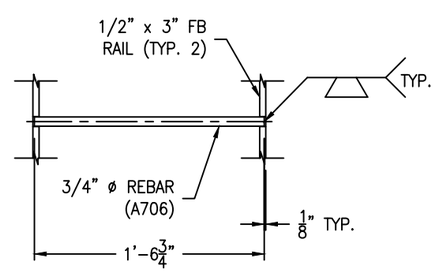

RUNG DETAIL

(20 REQ'D) SCALE: 1 1/2" = 1'-0"

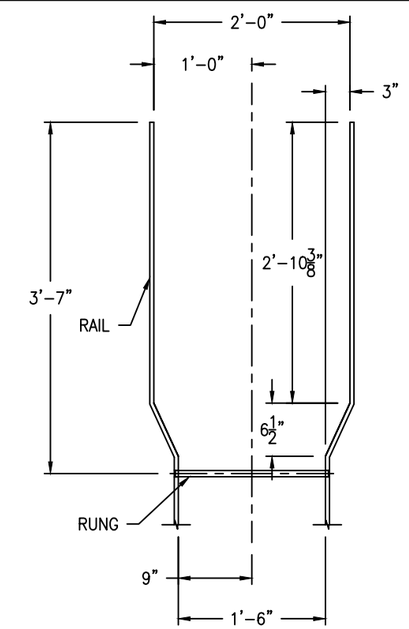

WALK-THRU DETAIL

SCALE: 1" = 1'-0"

GM-73

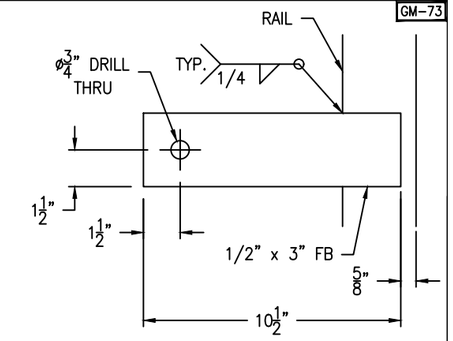

LADDER CLIPS DETAIL

(10 REQ'D) SCALE: 3" = 1'-0"

LADDER CLIP BOLTING:
(10) 5/8-11 NC X 2" HH BOLT - SA193-B7 (ZINC PLATED)
(10) 5/8-11 NC HH NUT - SA194-2H (ZINC PLATED)
Fall arrest system:
(1) Top & Bottom Bracket (PART# 6116631)
(1) Cable guide (PART# 6100400)
(1) 25' Cable (PART# 6104025)

FC-38

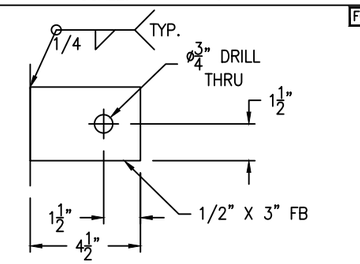

TANK CLIP DETAIL

(8 REQ'D) SCALE: 3" = 1'-0"

GM-73

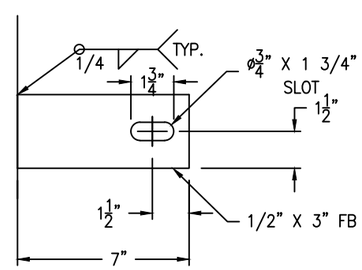

HANDRAIL CLIP DETAIL

(2 REQ'D) SCALE: 3" = 1'-0"

LADDER TO BE HOT-DIPPED GALVANIZED

REV	D.BY	C.BY	DATE	DESCRIPTION
				AS BUILT
3	RS	-	4/30/25	CERTIFIED
2	RS	AD	3/18/25	APPROVAL REV 2
1	RS	NP	2/10/25	APPROVAL REV 1
0	RS	NP	12/19/24	APPROVAL

⚠ REVISIONS

Savannah Tank & Equipment Corp.
1517 Telfair Road, Savannah, GA 31415
(912) 233-8902

DRAWN BY: RS
CHK'D BY: NP
APPROVED BY: NP
SCALE: 1/4" = 1'-0"

RIVER TO TAP
LIME DAY TANK(TANK#2)
EQUIP. # TK-9140-2
CUST. PO # G0080008.46

DRAWING NO.: 064-24-6 | SHT 7 OF 9 | REV. SET 3

FC-38

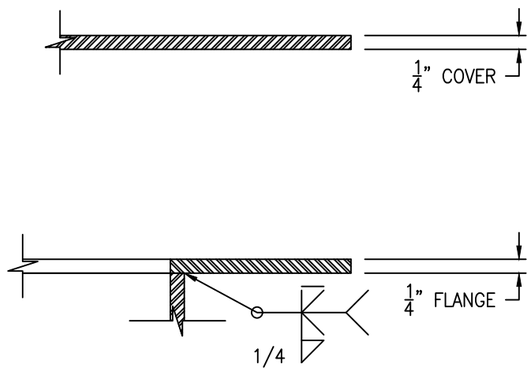

FLANGE/COVER DETAIL

(1 REQ'D) SCALE: 6" = 1'-0"

FC-38

Bolting for blind
(20) 5/8-11 NC x 1 1/2" HH BOLT
(20) 5/8-11 NC HH NUT
(1) 30" OD x 24" ID x 1/8" GASKET
W/ (20) 3/4" DIA. THRU HOLES EQUALLY SPACED ON 27 1/2" BC

Bolting for hinge
(2) 3/4-10 NC x 2 1/2" HH BOLT
(4) 3/4-10 NC HH NUT

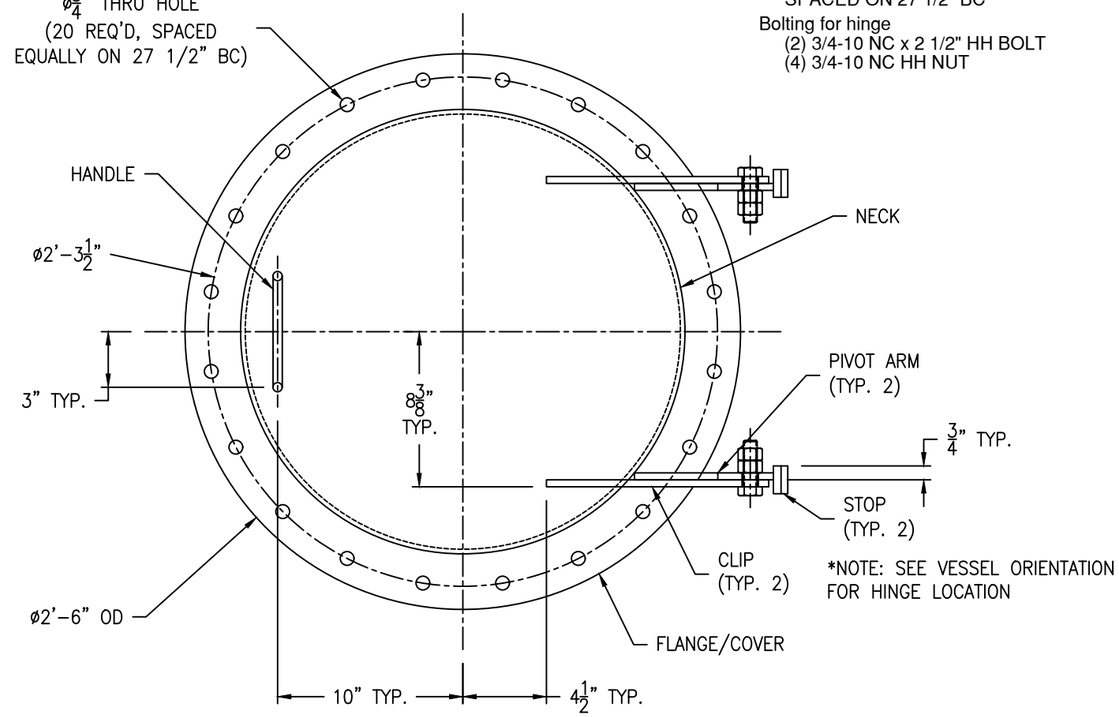

*NOTE: SEE VESSEL ORIENTATION FOR HINGE LOCATION

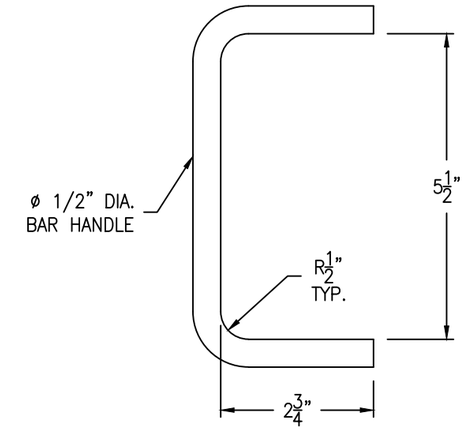

HANDLE DETAIL

(1 REQ'D) SCALE: 6" = 1'-0"

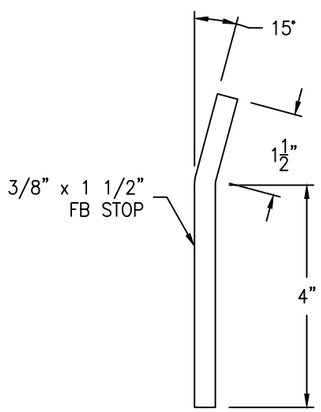

STOP DETAIL

(2 REQ'D) SCALE: 6" = 1'-0"

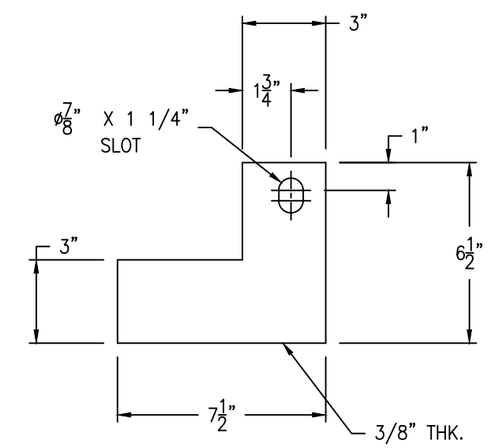

PIVOT ARM DETAIL

(2 REQ'D) SCALE: 3" = 1'-0"

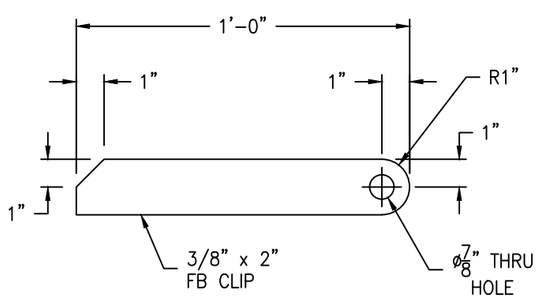

CLIP DETAIL

(2 REQ'D) SCALE: 3" = 1'-0"

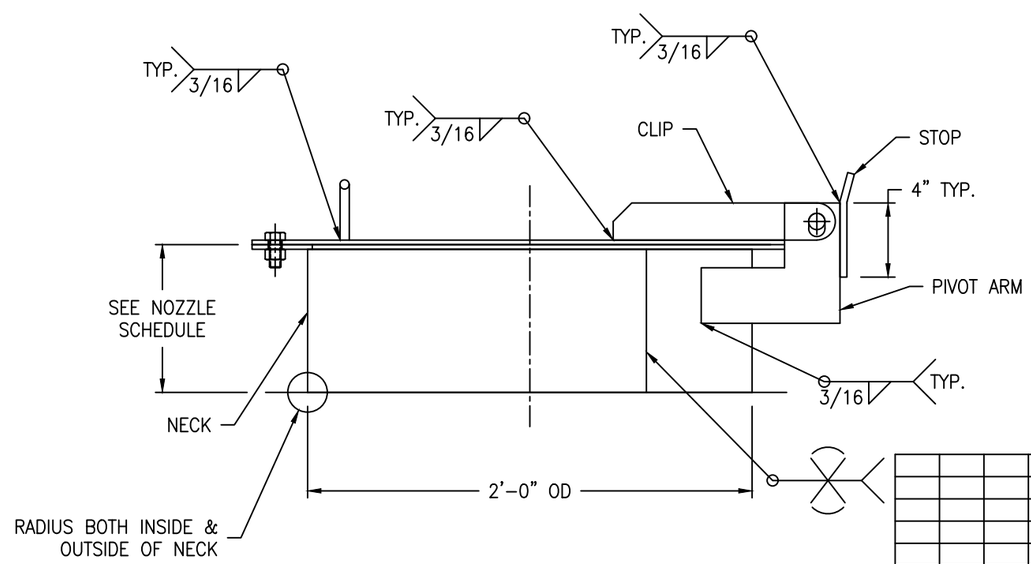

REV	D.BY	C.BY	DATE	DESCRIPTION
				AS BUILT
3	RS	–	4/30/25	CERTIFIED
2	RS	AD	3/18/25	APPROVAL REV 2
1	RS	NP	2/10/25	APPROVAL REV 1
0	RS	NP	12/19/24	APPROVAL

⚠1 REVISIONS

Savannah Tank & Equipment Corp.
1517 Telfair Road, Savannah, GA 31415
(912) 233-8902

DRAWN BY: RS
CHK'D BY: NP
APPROVED BY: NP
SCALE: 2" = 1'-0"

RIVER TO TAP
LIME DAY TANK(TANK#2)
EQUIP. # TK-9140-2
CUST. PO # G0080008.46

DRAWING NO.: 064-24-7 SHT 8 OF 9 REV. SET 3

FC-38

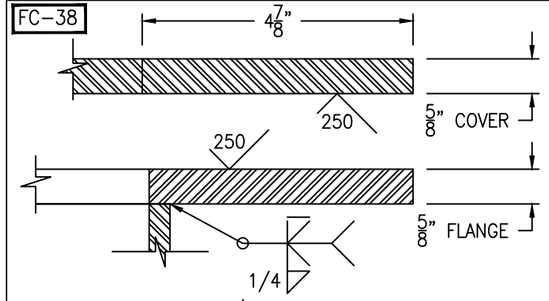

FLANGE/COVER DETAIL

(1 REQ'D) SCALE: 6" = 1'-0"

FC-38

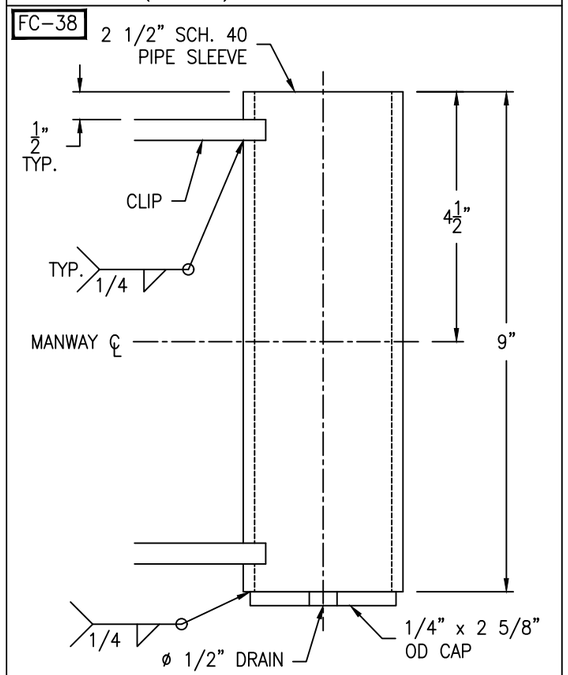

SLEEVE DETAIL

(1 REQ'D) SCALE: 6" = 1'-0"

FC-38

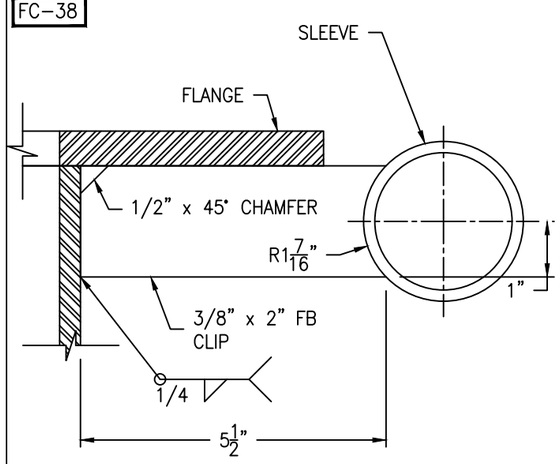

CLIP DETAIL

(2 REQ'D) SCALE: 6" = 1'-0"

FC-38

Bolting for blind
(42) 3/4-10 NC x 3" HH BOLT
(42) 3/4-10 NC HH NUT
(1) 35 3/8" OD x 30" ID x 1/8" GASKET

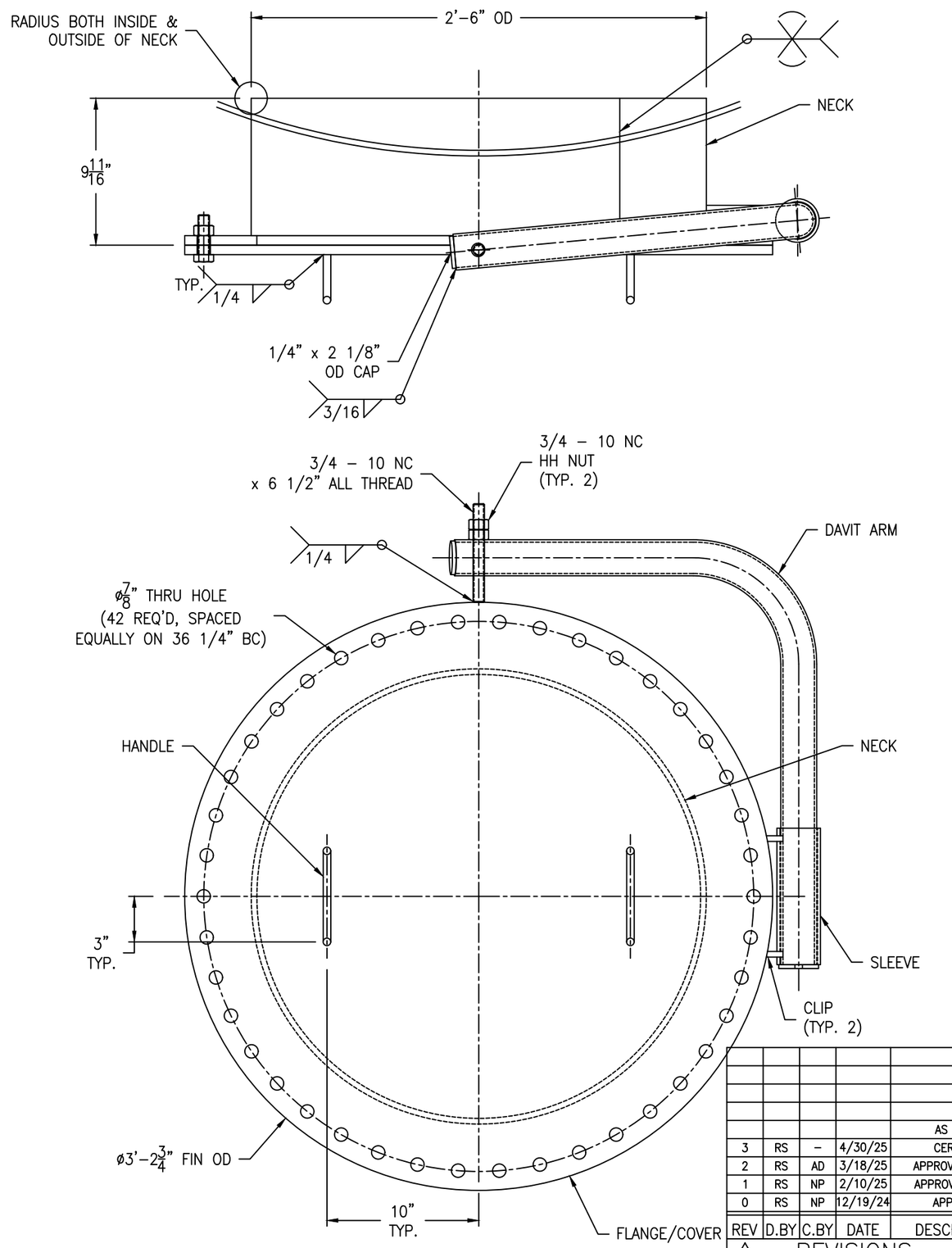

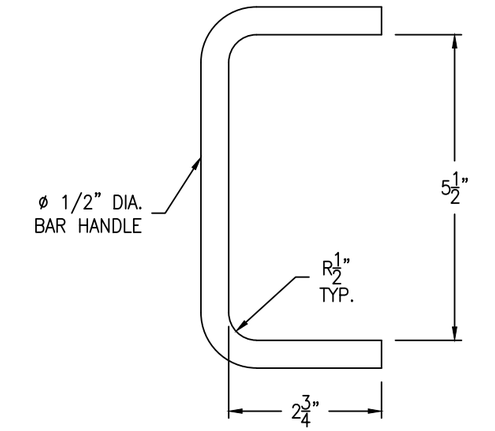

HANDLE DETAIL

(2 REQ'D) SCALE: 6" = 1'-0"

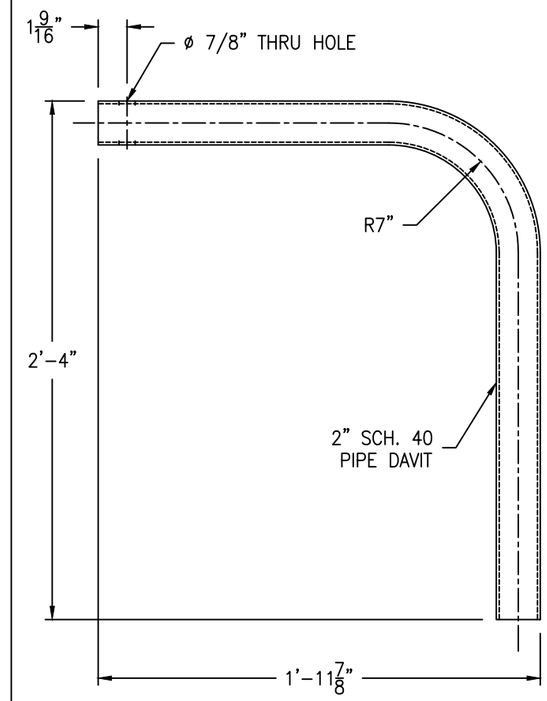

DAVIT ARM DETAIL

(1 REQ'D) SCALE: 2" = 1'-0"

REV	D.BY	C.BY	DATE	DESCRIPTION
				AS BUILT
3	RS	–	4/30/25	CERTIFIED
2	RS	AD	3/18/25	APPROVAL REV 2
1	RS	NP	2/10/25	APPROVAL REV 1
0	RS	NP	12/19/24	APPROVAL

⚠1 REVISIONS

Savannah Tank & Equipment Corp.
1517 Telfair Road, Savannah, GA 31415
(912) 233-8902

DRAWN BY: RS
CHK'D BY: NP
APPROVED BY: NP
SCALE: 2" = 1'-0"

RIVER TO TAP
LIME DAY TANK(TANK#2)
EQUIP. # TK-9140-2
CUST. PO # G0080008.46

DRAWING NO.: 064-24-8 SHT 9 OF 9 REV. SET 3